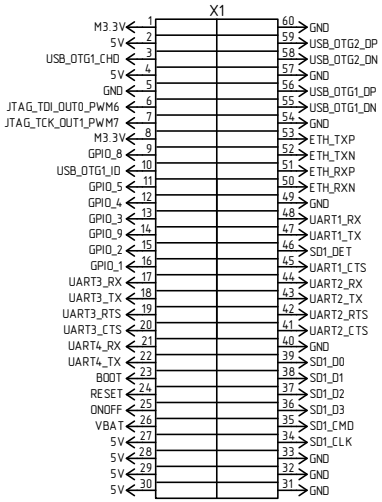

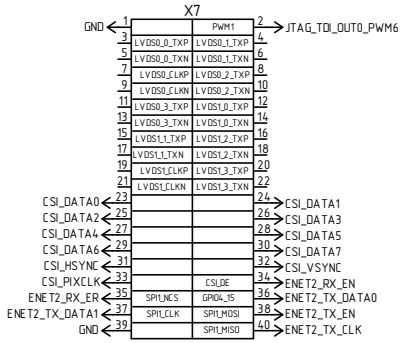

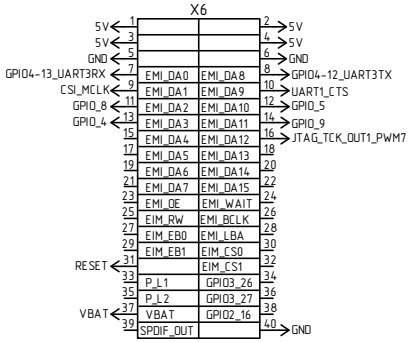

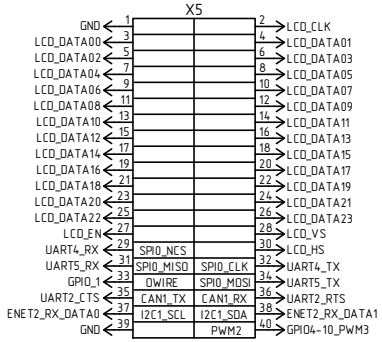

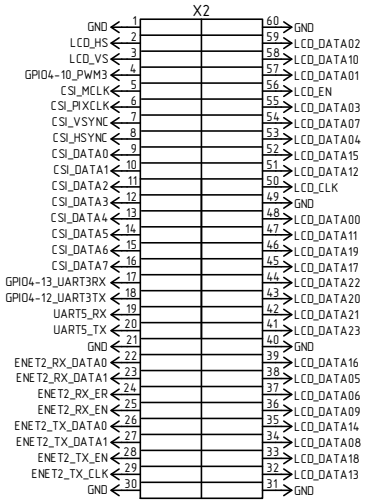

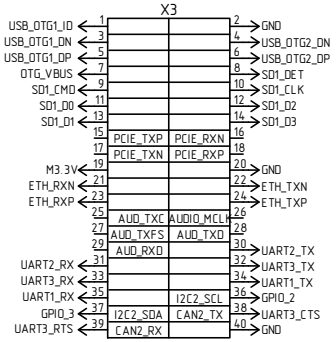

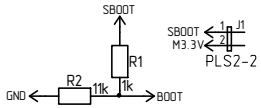

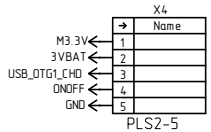

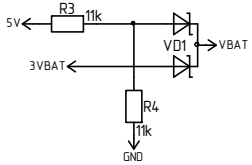

SK-iMX6ULL-OEM-Adapter

www.starterkit.ru

V1.A