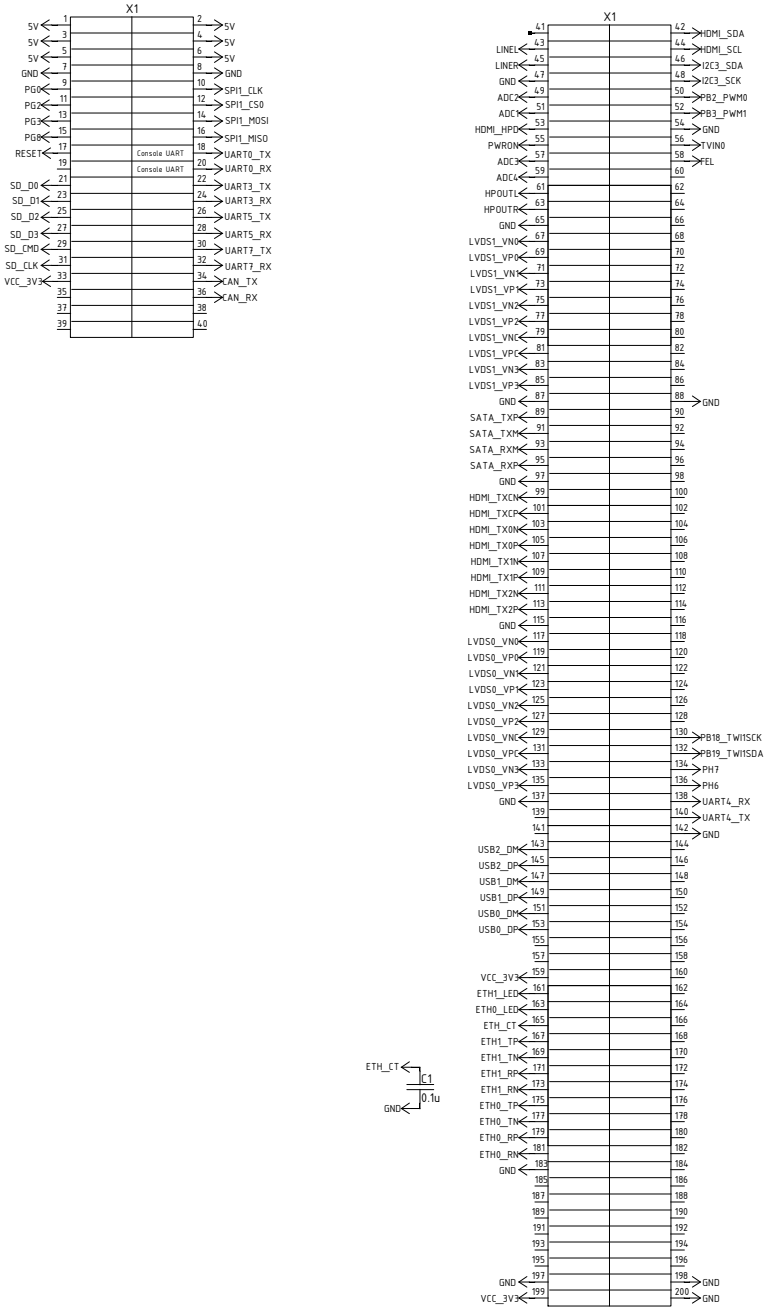

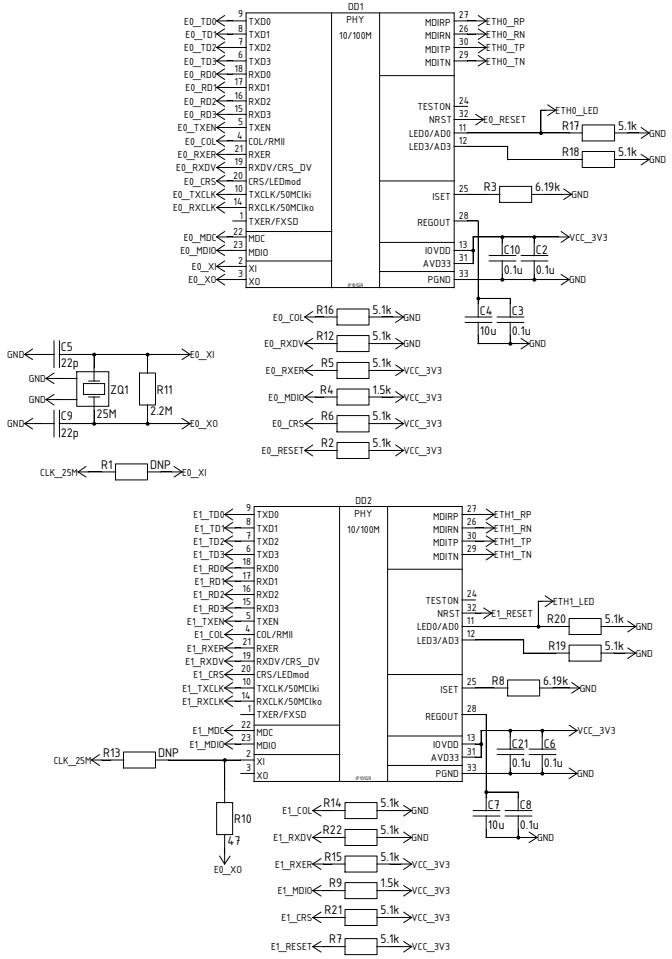

SK-A40i-SODIMM
V1.A
www.starterkit.ru

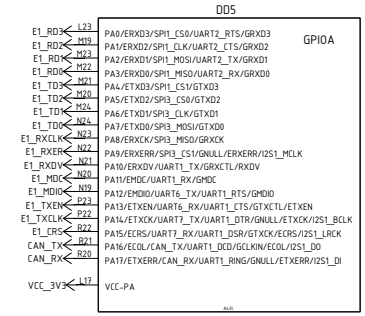
DD5
GPIOA
E1_RD3 L23 PA0/ERXD3/SPI1_CS0/UART2_RTS/GRXD3
E1_RD2 M19 PA1/ERXD2/SPI1_CLK/UART2_CTS/GRXD2
E1_RD1 M23 PA2/ERXD1/SPI1_MOSI/UART2_TX/GRXD1
E1_RD0 M22 PA3/ERXD0/SPI1_MISO/UART2_RX/GRXD0
E1_TD3 M21 PA4/ETXD3/SPI1_CS1/GTXD3
E1_TD2 M20 PA5/ETXD2/SPI3_CS0/GTXD2
E1_TD1 M24 PA6/ETXD1/SPI3_CLK/GTXD1
E1_TD0 N24 PA7/ETXD0/SPI3_MOSI/GTXD0
E1_RXCLK N23 PA8/ERXCK/SPI3_MISO/GRXCK
E1_RXER N22 PA9/ERXERR/SPI3_CS1/GNULL/ERXERR/I2S1_MCLK
E1_RXDV N21 PA10/ERXDV/UART1_TX/GRXCTL/RXDV
E1_MDC N20 PA11/EMDC/UART1_RX/GMDC
E1_MDIO N19 PA12/EMDIO/UART6_TX/UART1_RTS/GMDIO
E1_TXEN P23 PA13/ETXEN/UART6_RX/UART1_CTS/GTXCTL/ETXEN
E1_TXCLK P22 PA14/ETXCK/UART7_TX/UART1_DTR/GNULL/ETXCK/I2S1_BCLK
E1_CRS R22 PA15/ECRS/UART7_RX/UART1_DSR/GTXCK/ECRS/I2S1_LRCK
CAN_TX R21 PA16/ECOL/CAN_TX/UART1_DCD/GCLKIN/ECOL/I2S1_DO
CAN_RX R20 PA17/ETXERR/CAN_RX/UART1_RING/GNULL/ETXERR/I2S1_DI
VCC_3V3 L17 VCC-PA
AUO

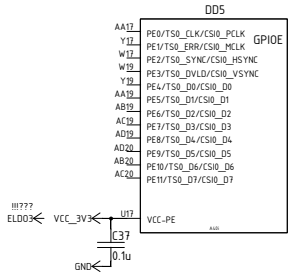
DD5
GPIOE
AA17 PE0/TS0_CLK/CSI0_PCLK
Y17 PE1/TS0_ERR/CSI0_MCLK
W17 PE2/TS0_SYNC/CSI0_HSYNC
W19 PE3/TS0_DVLD/CSI0_VSYNC
Y19 PE4/TS0_D0/CSI0_D0
AA19 PE5/TS0_D1/CSI0_D1
AB19 PE6/TS0_D2/CSI0_D2
AC19 PE7/TS0_D3/CSI0_D3
AD19 PE8/TS0_D4/CSI0_D4
AD20 PE9/TS0_D5/CSI0_D5
AB20 PE10/TS0_D6/CSI0_D6
AC20 PE11/TS0_D7/CSI0_D7
!!!???
ELDO3 VCC_3V3 U17 VCC-PE
C37
0.1u
GND
AUO

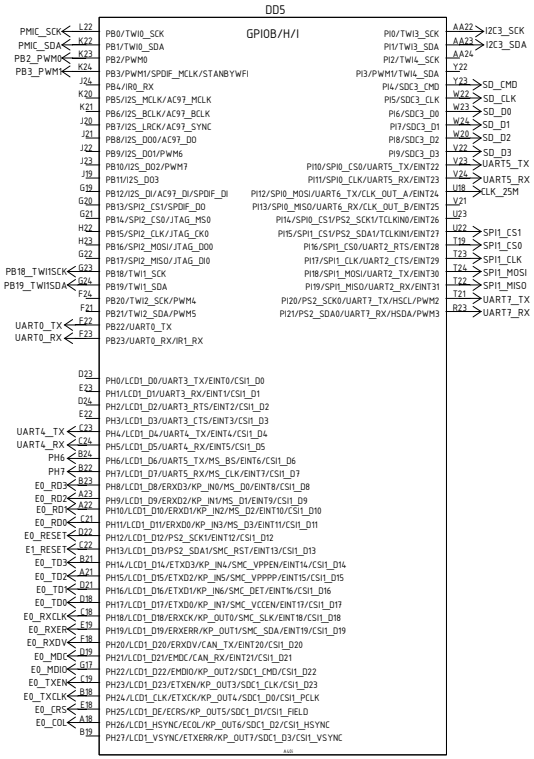
DD5
GPIOB/H/I
PMIC_SCK L22 PB0/TWI0_SCK
PMIC_SDA K22 PB1/TWI0_SDA
PB2_PWM0 K23 PB2/PWM0
PB3_PWM1 K24 PB3/PWM1/SPDIF_MCLK/STANBYWFI
J24 PB4/IR0_RX
K20 PB5/I2S_MCLK/AC97_MCLK
J20 PB6/I2S_BCLK/AC97_BCLK
J21 PB7/I2S_LRCK/AC97_SYNC
J22 PB8/I2S_DO0/AC97_DO
J23 PB9/I2S_DO1/PWM6
J19 PB10/I2S_DO2/PWM7
G19 PB11/I2S_DO3
G20 PB12/I2S_DI/AC97_DI/SPDIF_DI
G21 PB13/SPI2_CS1/SPDIF_DO
H22 PB14/SPI2_CS0/JTAG_MS0
H23 PB15/SPI2_CLK/JTAG_CK0
G22 PB16/SPI2_MOSI/JTAG_DO0
G23 PB17/SPI2_MISO/JTAG_DI0
PB18_TWI1SCK G24 PB18/TWI1_SCK
PB19_TWI1SDA F24 PB19/TWI1_SDA
F21 PB20/TWI2_SCK/PWM4
F22 PB21/TWI2_SDA/PWM5
UART0_TX F23 PB22/UART0_TX
UART0_RX PB23/UART0_RX/IR1_RX
AA22 PI0/TWI3_SCK I2C3_SCK
AA23 PI1/TWI3_SDA I2C3_SDA
AA24 PI2/TWI4_SCK
Y22 PI3/PWM1/TWI4_SDA
Y23 PI4/SDC3_CMD SD_CMD
W22 PI5/SDC3_CLK SD_CLK
W23 PI6/SDC3_D0 SD_D0
W24 PI7/SDC3_D1 SD_D1
V20 PI8/SDC3_D2 SD_D2
V22 PI9/SDC3_D3 SD_D3
V23 PI10/SPI0_CS0/UART5_TX/EINT22 UART5_TX
V24 PI11/SPI0_CLK/UART5_RX/EINT23 UART5_RX
U18 PI12/SPI0_MOSI/UART6_TX/CLK_OUT_A/EINT24 CLK_25M
V21 PI13/SPI0_MISO/UART6_RX/CLK_OUT_B/EINT25
U23 PI14/SPI0_CS1/PS2_SCK1/TCLKIN0/EINT26
U22 PI15/SPI1_CS1/PS2_SDA1/TCLKIN1/EINT27 SPI1_CS1
T19 PI16/SPI1_CS0/UART2_RTS/EINT28 SPI1_CS0
T23 PI17/SPI1_CLK/UART2_CTS/EINT29 SPI1_CLK
T24 PI18/SPI1_MOSI/UART2_TX/EINT30 SPI1_MOSI
T22 PI19/SPI1_MISO/UART2_RX/EINT31 SPI1_MISO
T21 PI20/PS2_SCK0/UART7_TX/HSCL/PWM2 UART7_TX
R23 PI21/PS2_SDA0/UART7_RX/HSDA/PWM3 UART7_RX
D23 PH0/LCD1_D0/UART3_TX/EINT0/CSI1_D0
F23 PH1/LCD1_D1/UART3_RX/EINT1/CSI1_D1
D24 PH2/LCD1_D2/UART3_RTS/EINT2/CSI1_D2
E22 PH3/LCD1_D3/UART3_CTS/EINT3/CSI1_D3
UART4_TX C23 PH4/LCD1_D4/UART4_TX/EINT4/CSI1_D4
UART4_RX C24 PH5/LCD1_D5/UART4_RX/EINT5/CSI1_D5
PH6 B24 PH6/LCD1_D6/UART5_TX/MS_BS/EINT6/CSI1_D6
PH7 B22 PH7/LCD1_D7/UART5_RX/MS_CLK/EINT7/CSI1_D7
E0_RD3 B23 PH8/LCD1_D8/ERXD3/KP_IN0/MS_D0/EINT8/CSI1_D8
E0_RD2 A23 PH9/LCD1_D9/ERXD2/KP_IN1/MS_D1/EINT9/CSI1_D9
E0_RD1 A22 PH10/LCD1_D10/ERXD1/KP_IN2/MS_D2/EINT10/CSI1_D10
E0_RD0 C21 PH11/LCD1_D11/ERXD0/KP_IN3/MS_D3/EINT11/CSI1_D11
E0_RESET D22 PH12/LCD1_D12/PS2_SCK1/EINT12/CSI1_D12
E1_RESET C22 PH13/LCD1_D13/PS2_SDA1/SMC_RST/EINT13/CSI1_D13
E0_TD3 B21 PH14/LCD1_D14/ETXD3/KP_IN4/SMC_VPPEN/EINT14/CSI1_D14
E0_TD2 A21 PH15/LCD1_D15/ETXD2/KP_IN5/SMC_VPPPP/EINT15/CSI1_D15
E0_TD1 D21 PH16/LCD1_D16/ETXD1/KP_IN6/SMC_DET/EINT16/CSI1_D16
E0_TD0 D18 PH17/LCD1_D17/ETXD0/KP_IN7/SMC_VCCEN/EINT17/CSI1_D17
E0_RXCLK C18 PH18/LCD1_D18/ERXCK/KP_OUT0/SMC_SLK/EINT18/CSI1_D18
E0_RXER E19 PH19/LCD1_D19/ERXERR/KP_OUT1/SMC_SDA/EINT19/CSI1_D19
E0_RXDV F18 PH20/LCD1_D20/ERXDV/CAN_TX/EINT20/CSI1_D20
E0_MDC D19 PH21/LCD1_D21/EMDC/CAN_RX/EINT21/CSI1_D21
E0_MDIO G17 PH22/LCD1_D22/EMDIO/KP_OUT2/SDC1_CMD/CSI1_D22
E0_TXEN C19 PH23/LCD1_D23/ETXEN/KP_OUT3/SDC1_CLK/CSI1_D23
E0_TXCLK B18 PH24/LCD1_CLK/ETXCK/KP_OUT4/SDC1_D0/CSI1_PCLK
E0_CRS E18 PH25/LCD1_DE/ECRS/KP_OUT5/SDC1_D1/CSI1_FIELD
E0_COL A18 PH26/LCD1_HSYNC/ECOL/KP_OUT6/SDC1_D2/CSI1_HSYNC
B19 PH27/LCD1_VSYNC/ETXERR/KP_OUT7/SDC1_D3/CSI1_VSYNC
AUO

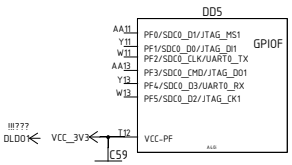
DD5
GPIOF
AA11 PF0/SDC0_D1/JTAG_MS1
Y11 PF1/SDC0_D0/JTAG_DI1
W11 PF2/SDC0_CLK/UART0_TX
AA13 PF3/SDC0_CMD/JTAG_DO1
Y13 PF4/SDC0_D3/UART0_RX
W13 PF5/SDC0_D2/JTAG_CK1
!!!???
DLDO1 VCC_3V3 T12 VCC-PF
C59
0.1u
GND
AUO

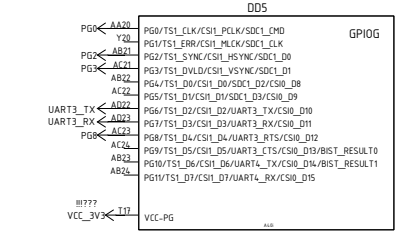
DD5
GPIOG
PG0 AA20 PG0/TS1_CLK/CSI1_PCLK/SDC1_CMD
Y20 PG1/TS1_ERR/CSI1_MLCK/SDC1_CLK
PG2 AB21 PG2/TS1_SYNC/CSI1_HSYNC/SDC1_D0
PG3 AC21 PG3/TS1_DVLD/CSI1_VSYNC/SDC1_D1
AB22 PG4/TS1_D0/CSI1_D0/SDC1_D2/CSI0_D8
AC22 PG5/TS1_D1/CSI1_D1/SDC1_D3/CSI0_D9
UART3_TX AD22 PG6/TS1_D2/CSI1_D2/UART3_TX/CSI0_D10
UART3_RX AD23 PG7/TS1_D3/CSI1_D3/UART3_RX/CSI0_D11
PG8 AC23 PG8/TS1_D4/CSI1_D4/UART3_RTS/CSI0_D12
AC24 PG9/TS1_D5/CSI1_D5/UART3_CTS/CSI0_D13/BIST_RESULT0
AB23 PG10/TS1_D6/CSI1_D6/UART4_TX/CSI0_D14/BIST_RESULT1
AB24 PG11/TS1_D7/CSI1_D7/UART4_RX/CSI0_D15
!!!???
VCC_3V3 T17 VCC-PG
AUO

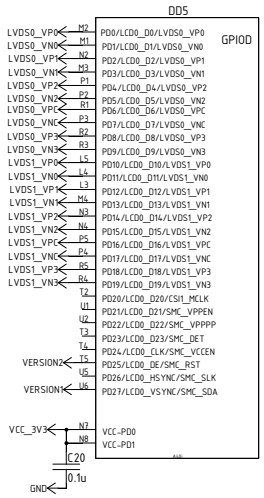
DD5
GPIOD
LVDS0_VP0 M2 PD0/LCD0_D0/LVDS0_VP0
LVDS0_VN0 M1 PD1/LCD0_D1/LVDS0_VN0
LVDS0_VP1 N2 PD2/LCD0_D2/LVDS0_VP1
LVDS0_VN1 M3 PD3/LCD0_D3/LVDS0_VN1
LVDS0_VP2 P1 PD4/LCD0_D4/LVDS0_VP2
LVDS0_VN2 P2 PD5/LCD0_D5/LVDS0_VN2
LVDS0_VPC R1 PD6/LCD0_D6/LVDS0_VPC
LVDS0_VNC P3 PD7/LCD0_D7/LVDS0_VNC
LVDS0_VP3 R2 PD8/LCD0_D8/LVDS0_VP3
LVDS0_VN3 R3 PD9/LCD0_D9/LVDS0_VN3
LVDS1_VP0 L5 PD10/LCD0_D10/LVDS1_VP0
LVDS1_VN0 L4 PD11/LCD0_D11/LVDS1_VN0
LVDS1_VP1 L3 PD12/LCD0_D12/LVDS1_VP1
LVDS1_VN1 M4 PD13/LCD0_D13/LVDS1_VN1
LVDS1_VP2 N3 PD14/LCD0_D14/LVDS1_VP2
LVDS1_VN2 N4 PD15/LCD0_D15/LVDS1_VN2
LVDS1_VPC P5 PD16/LCD0_D16/LVDS1_VPC
LVDS1_VNC P4 PD17/LCD0_D17/LVDS1_VNC
LVDS1_VP3 R5 PD18/LCD0_D18/LVDS1_VP3
LVDS1_VN3 R4 PD19/LCD0_D19/LVDS1_VN3
T2 PD20/LCD0_D20/CSI1_MCLK
U1 PD21/LCD0_D21/SMC_VPPEN
U2 PD22/LCD0_D22/SMC_VPPPP
T3 PD23/LCD0_D23/SMC_DET
T4 PD24/LCD0_CLK/SMC_VCCEN
VERSION2 T5 PD25/LCD0_DE/SMC_RST
U5 PD26/LCD0_HSYNC/SMC_SLK
VERSION1 U6 PD27/LCD0_VSYNC/SMC_SDA
VCC_3V3 N7 VCC-PD0
N8 VCC-PD1
C20
0.1u
GND
AUO
VERSION1 R39 DNP GND
VERSION2 R52 DNP GND

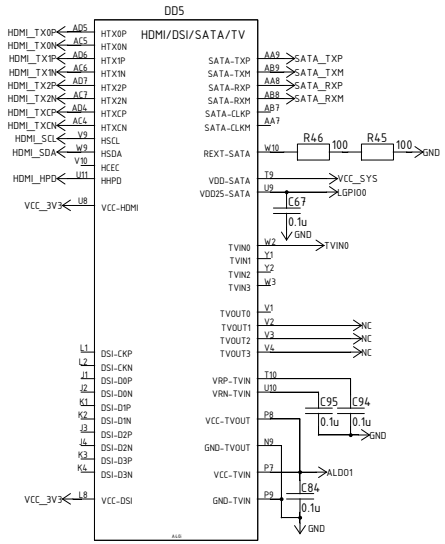
DD5
HDMI/DSI/SATA/TV
HDMI_TX0P AD5 HTX0P
HDMI_TX0N AC5 HTX0N
HDMI_TX1P AD6 HTX1P
HDMI_TX1N AC6 HTX1N
HDMI_TX2P AD7 HTX2P
HDMI_TX2N AC7 HTX2N
HDMI_TXCP AD4 HTXCP
HDMI_TXCN AC4 HTXCN
HDMI_SCL V9 HSCL
HDMI_SDA W9 HSDA
V10 HCEC
HDMI_HPD U11 HHPD
VCC_3V3 U8 VCC-HDMI
SATA-TXP AA9 SATA_TXP
SATA-TXM AB9 SATA_TXM
SATA-RXP AA8 SATA_RXP
SATA-RXM AB8 SATA_RXM
SATA-CLKP AB7
SATA-CLKM AA7
REXT-SATA W10 R46 100 R45 100 GND
VDD-SATA T9 VCC_SYS
VDD25-SATA U9 LGPIO0
C67
0.1u
GND
TVIN0 W2 TVIN0
TVIN1 Y1
TVIN2 Y2
TVIN3 W3
TVOUT0 V1
TVOUT1 V2 NC
TVOUT2 V3 NC
TVOUT3 V4 NC
L1 DSI-CKP
L2 DSI-CKN
J1 DSI-D0P
J2 DSI-D0N
K1 DSI-D1P
K2 DSI-D1N
J3 DSI-D2P
J4 DSI-D2N
K3 DSI-D3P
K4 DSI-D3N
VRP-TVIN T10
VRN-TVIN U10
C95 C94
0.1u 0.1u
GND
VCC-TVOUT P8
GND-TVOUT N9
VCC-TVIN P7 ALDO1
C84
0.1u
GND-TVIN P9
VCC_3V3 L8 VCC-DSI
AUO

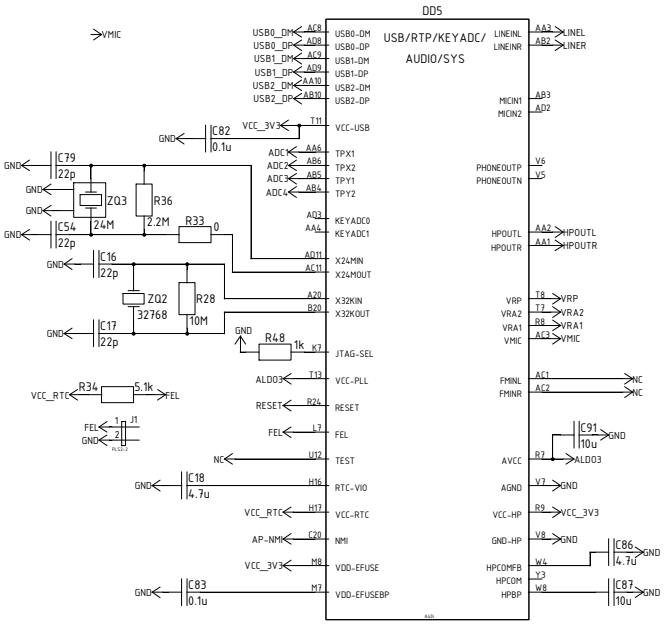
DD5
USB/RTP/KEYADC/
AUDIO/SYS
VMIC
USB0_DM AC8 USB0-DM
USB0_DP AD8 USB0-DP
USB1_DM AC9 USB1-DM
USB1_DP AD9 USB1-DP
USB2_DM AA10 USB2-DM
USB2_DP AB10 USB2-DP
VCC_3V3 T11 VCC-USB
GND C82 0.1u
ADC1 AA6 TPX1
ADC2 AB6 TPX2
ADC3 AB5 TPY1
ADC4 AB4 TPY2
AD3 KEYADC0
AA4 KEYADC1
AD11 X24MIN
AC11 X24MOUT
A20 X32KIN
B20 X32KOUT
K7 JTAG-SEL
ALDO3 T13 VCC-PLL
RESET R24 RESET
FEL L7 FEL
NC U12 TEST
H16 RTC-VIO
VCC_RTC H17 VCC-RTC
AP-NMI C20 NMI
VCC_3V3 M8 VDD-EFUSE
M7 VDD-EFUSEBP
GND C79 22p
Z03 24M
R36 2.2M
GND C54 22p
R33 0
GND C16 22p
Z02 32768
R28 10M
GND C17 22p
GND R48 1k
VCC_RTC R34 5.1k FEL
FEL GND J1 PLS1-2
GND C18 4.7u
GND C83 0.1u
LINEINL AA3 LINEL
LINEINR AB2 LINER
MICIN1 AB3
MICIN2 AD2
PHONEOUTP V6
PHONEOUTN V5
HPOUTL AA2 HPOUTL
HPOUTR AA1 HPOUTR
VRP T8 VRP
VRA2 T7 VRA2
VRA1 R8 VRA1
VMIC AC3 VMIC
FMINL AC1 NC
FMINR AC2 NC
C91 10u GND
AVCC R7 ALDO3
AGND V7 GND
VCC-HP R9 VCC_3V3
GND-HP V8 GND
HPCOMFB W4
HPCOM Y3
HPBP W8
C86 4.7u GND
C87 10u GND
AUO
C99 10u VRP
C93 0.1u GND
C85 4.7u VRA2
R44 200k GND
C92 4.7u VRA1 GND

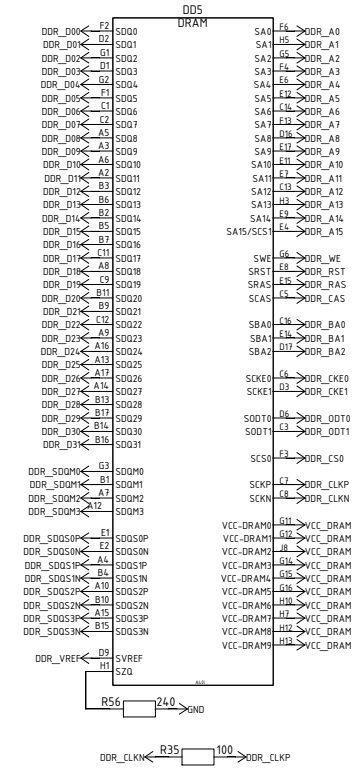
DD5
DRAM
DDR_D00 F2 SDQ0
DDR_D01 D2 SDQ1
DDR_D02 G1 SDQ2
DDR_D03 D1 SDQ3
DDR_D04 G2 SDQ4
DDR_D05 F1 SDQ5
DDR_D06 C1 SDQ6
DDR_D07 C2 SDQ7
DDR_D08 A5 SDQ8
DDR_D09 A3 SDQ9
DDR_D10 A6 SDQ10
DDR_D11 A2 SDQ11
DDR_D12 B3 SDQ12
DDR_D13 B6 SDQ13
DDR_D14 B2 SDQ14
DDR_D15 B5 SDQ15
DDR_D16 B7 SDQ16
DDR_D17 C11 SDQ17
DDR_D18 A8 SDQ18
DDR_D19 C9 SDQ19
DDR_D20 B11 SDQ20
DDR_D21 B9 SDQ21
DDR_D22 C12 SDQ22
DDR_D23 A9 SDQ23
DDR_D24 A16 SDQ24
DDR_D25 A13 SDQ25
DDR_D26 A17 SDQ26
DDR_D27 A14 SDQ27
DDR_D28 B13 SDQ28
DDR_D29 B17 SDQ29
DDR_D30 B14 SDQ30
DDR_D31 B16 SDQ31
DDR_SDQM0 G3 SDQM0
DDR_SDQM1 B1 SDQM1
DDR_SDQM2 A7 SDQM2
DDR_SDQM3 A12 SDQM3
DDR_SDQS0P E1 SDQS0P
DDR_SDQS0N E2 SDQS0N
DDR_SDQS1P A4 SDQS1P
DDR_SDQS1N B4 SDQS1N
DDR_SDQS2P A10 SDQS2P
DDR_SDQS2N B10 SDQS2N
DDR_SDQS3P A15 SDQS3P
DDR_SDQS3N B15 SDQS3N
DDR_VREF D9 SVREF
H1 SZQ
SA0 N3 DDR_A0
SA1 H5 DDR_A1
SA2 G5 DDR_A2
SA3 F4 DDR_A3
SA4 E6 DDR_A4
SA5 E12 DDR_A5
SA6 C14 DDR_A6
SA7 F13 DDR_A7
SA8 D16 DDR_A8
SA9 E17 DDR_A9
SA10 E11 DDR_A10
SA11 E7 DDR_A11
SA12 C13 DDR_A12
SA13 H3 DDR_A13
SA14 E9 DDR_A14
SA15/SCS1 E4 DDR_A15
SWE G6 DDR_WE
SRST E8 DDR_RST
SRAS E15 DDR_RAS
SCAS C5 DDR_CAS
SBA0 C16 DDR_BA0
SBA1 E14 DDR_BA1
SBA2 D17 DDR_BA2
SCKE0 C6 DDR_CKE0
SCKE1 D3 DDR_CKE1
SODT0 D6 DDR_ODT0
SODT1 C3 DDR_ODT1
SCS0 F3 DDR_CS0
SCKP C7 DDR_CLKP
SCKN C8 DDR_CLKN
VCC-DRAM0 G11 VCC_DRAM
VCC-DRAM1 G12 VCC_DRAM
VCC-DRAM2 J8 VCC_DRAM
VCC-DRAM3 G14 VCC_DRAM
VCC-DRAM4 G15 VCC_DRAM
VCC-DRAM5 G16 VCC_DRAM
VCC-DRAM6 H10 VCC_DRAM
VCC-DRAM7 H7 VCC_DRAM
VCC-DRAM8 H12 VCC_DRAM
VCC-DRAM9 H13 VCC_DRAM
R56 240 GND
DDR_CLKN R35 100 DDR_CLKP

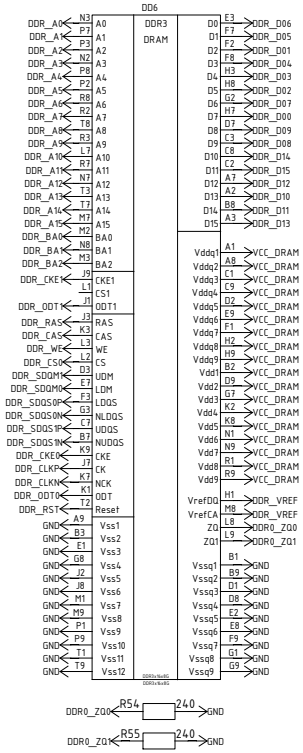
DD6
DDR3
DRAM
DDR_A0 N3 A0
DDR_A1 P7 A1
DDR_A2 P3 A2
DDR_A3 N2 A3
DDR_A4 P8 A4
DDR_A5 P2 A5
DDR_A6 R8 A6
DDR_A7 R2 A7
DDR_A8 T8 A8
DDR_A9 R3 A9
DDR_A10 L7 A10
DDR_A11 R7 A11
DDR_A12 N7 A12
DDR_A13 T3 A13
DDR_A14 T7 A14
DDR_A15 M7 A15
DDR_BA0 M2 BA0
DDR_BA1 N8 BA1
DDR_BA2 M3 BA2
DDR_CKE1 J9 CKE1
L1 CS1
DDR_ODT1 J1 ODT1
DDR_RAS J3 RAS
DDR_CAS K3 CAS
DDR_WE L3 WE
DDR_CS0 L2 CS
DDR_SDQM1 D3 UDM
DDR_SDQM0 E7 LDM
DDR_SDQS0P F3 LDQS
DDR_SDQS0N G3 NLDQS
DDR_SDQS1P C7 UDQS
DDR_SDQS1N B7 NUDQS
DDR_CKE0 K9 CKE
DDR_CLKP J7 CK
DDR_CLKN K7 NCK
DDR_ODT0 K1 ODT
DDR_RST T2 Reset
A9 Vss1
B3 Vss2
E1 Vss3
G8 Vss4
J2 Vss5
J8 Vss6
M1 Vss7
M9 Vss8
P1 Vss9
P9 Vss10
T1 Vss11
T9 Vss12
DDR3x8x96
DDR3x8x96
D0 E3 DDR_D06
D1 F7 DDR_D05
F2 F2 DDR_D01
F8 F8 DDR_D04
H3 H3 DDR_D03
H8 H8 DDR_D02
G2 G2 DDR_D07
H7 H7 DDR_D00
D7 D7 DDR_D09
C3 C3 DDR_D08
C8 C8 DDR_D14
C2 C2 DDR_D15
A7 A7 DDR_D12
A2 A2 DDR_D10
B8 B8 DDR_D11
A3 A3 DDR_D13
A1 Vddq1 VCC_DRAM
A8 Vddq2 VCC_DRAM
C1 Vddq3 VCC_DRAM
C9 Vddq4 VCC_DRAM
D2 Vddq5 VCC_DRAM
E9 Vddq6 VCC_DRAM
F1 Vddq7 VCC_DRAM
H2 Vddq8 VCC_DRAM
H9 Vddq9 VCC_DRAM
B2 Vdd1 VCC_DRAM
D9 Vdd2 VCC_DRAM
G7 Vdd3 VCC_DRAM
K2 Vdd4 VCC_DRAM
K8 Vdd5 VCC_DRAM
N1 Vdd6 VCC_DRAM
N9 Vdd7 VCC_DRAM
R1 Vdd8 VCC_DRAM
R9 Vdd9 VCC_DRAM
H1 VrefDQ DDR_VREF
M8 VrefCA DDR_VREF
L8 ZQ DDR0_ZQ0
L9 ZQ1 DDR0_ZQ1
B1 Vssq1 GND
B9 Vssq2 GND
D1 Vssq3 GND
D8 Vssq4 GND
E2 Vssq5 GND
E8 Vssq6 GND
F9 Vssq7 GND
G1 Vssq8 GND
G9 Vssq9 GND
DDR0_ZQ0 R54 240 GND
DDR0_ZQ1 R55 240 GND

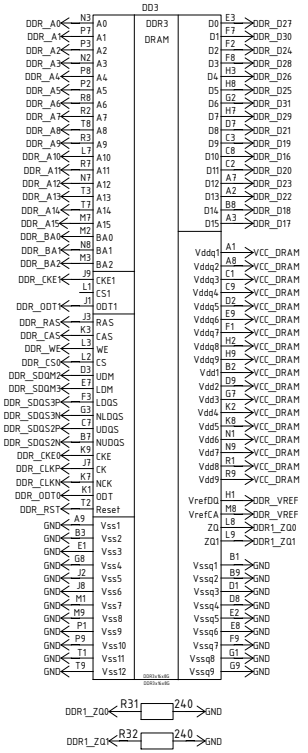
DD3
DDR3
DRAM
DDR_A0 N3 A0
DDR_A1 P7 A1
DDR_A2 P3 A2
DDR_A3 N2 A3
DDR_A4 P8 A4
DDR_A5 P2 A5
DDR_A6 R8 A6
DDR_A7 R2 A7
DDR_A8 T8 A8
DDR_A9 R3 A9
DDR_A10 L7 A10
DDR_A11 R7 A11
DDR_A12 N7 A12
DDR_A13 T3 A13
DDR_A14 T7 A14
DDR_A15 M7 A15
DDR_BA0 M2 BA0
DDR_BA1 N8 BA1
DDR_BA2 M3 BA2
DDR_CKE1 J9 CKE1
L1 CS1
DDR_ODT1 J1 ODT1
DDR_RAS J3 RAS
DDR_CAS K3 CAS
DDR_WE L3 WE
DDR_CS0 L2 CS
DDR_SDQM2 D3 UDM
DDR_SDQM3 E7 LDM
DDR_SDQS3P F3 LDQS
DDR_SDQS3N G3 NLDQS
DDR_SDQS2P C7 UDQS
DDR_SDQS2N B7 NUDQS
DDR_CKE0 K9 CKE
DDR_CLKP J7 CK
DDR_CLKN K7 NCK
DDR_ODT0 K1 ODT
DDR_RST T2 Reset
A9 Vss1
B3 Vss2
E1 Vss3
G8 Vss4
J2 Vss5
J8 Vss6
M1 Vss7
M9 Vss8
P1 Vss9
P9 Vss10
T1 Vss11
T9 Vss12
DDR3x8x96
DDR3x8x96
D0 E3 DDR_D27
D1 F7 DDR_D30
D2 F2 DDR_D24
D3 F8 DDR_D28
D4 H3 DDR_D26
D5 H8 DDR_D25
D6 G2 DDR_D31
D7 H7 DDR_D29
D8 D7 DDR_D21
D9 C3 DDR_D19
D10 C8 DDR_D16
D11 C2 DDR_D20
D12 A7 DDR_D23
D13 A2 DDR_D22
D14 B8 DDR_D18
D15 A3 DDR_D17
A1 Vddq1 VCC_DRAM
A8 Vddq2 VCC_DRAM
C1 Vddq3 VCC_DRAM
C9 Vddq4 VCC_DRAM
D2 Vddq5 VCC_DRAM
E9 Vddq6 VCC_DRAM
F1 Vddq7 VCC_DRAM
H2 Vddq8 VCC_DRAM
H9 Vddq9 VCC_DRAM
B2 Vdd1 VCC_DRAM
D9 Vdd2 VCC_DRAM
G7 Vdd3 VCC_DRAM
K2 Vdd4 VCC_DRAM
K8 Vdd5 VCC_DRAM
N1 Vdd6 VCC_DRAM
N9 Vdd7 VCC_DRAM
R1 Vdd8 VCC_DRAM
R9 Vdd9 VCC_DRAM
H1 VrefDQ DDR_VREF
M8 VrefCA DDR_VREF
L8 ZQ DDR1_ZQ0
L9 ZQ1 DDR1_ZQ1
B1 Vssq1 GND
B9 Vssq2 GND
D1 Vssq3 GND
D8 Vssq4 GND
E2 Vssq5 GND
E8 Vssq6 GND
F9 Vssq7 GND
G1 Vssq8 GND
G9 Vssq9 GND
DDR1_ZQ0 R31 240 GND
DDR1_ZQ1 R32 240 GND

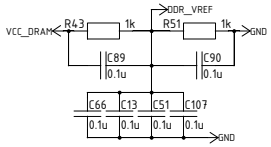
DDR_VREF
VCC_DRAM R43 1k R51 1k GND
C89 0.1u
C90 0.1u
C66 0.1u
C13 0.1u
C51 0.1u
C107 0.1u
GND

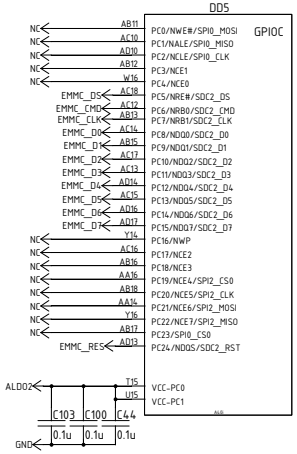
DD5
GPIOC
NC AB11 PC0/NWE#/SPI0_MOSI
NC AC10 PC1/NALE/SPI0_MISO
NC AD10 PC2/NCLE/SPI0_CLK
NC AB12 PC3/NCE1
NC W16 PC4/NCE0
EMMC_DS AC18 PC5/NRE#/SDC2_DS
EMMC_CMD AC12 PC6/NRB0/SDC2_CMD
EMMC_CLK AB13 PC7/NRB1/SDC2_CLK
EMMC_D0 AC14 PC8/NDQ0/SDC2_D0
EMMC_D1 AB15 PC9/NDQ1/SDC2_D1
EMMC_D2 AC17 PC10/NDQ2/SDC2_D2
EMMC_D3 AC13 PC11/NDQ3/SDC2_D3
EMMC_D4 AD14 PC12/NDQ4/SDC2_D4
EMMC_D5 AC15 PC13/NDQ5/SDC2_D5
EMMC_D6 AD16 PC14/NDQ6/SDC2_D6
EMMC_D7 AD17 PC15/NDQ7/SDC2_D7
Y14 PC16/NWP
NC AC16 PC17/NCE2
NC AB16 PC18/NCE3
NC AA16 PC19/NCE4/SPI2_CS0
NC AB18 PC20/NCE5/SPI2_CLK
NC AA14 PC21/NCE6/SPI2_MOSI
NC Y16 PC22/NCE7/SPI2_MISO
NC AB17 PC23/SPI0_CS0
EMMC_RES AD13 PC24/NDQS/SDC2_RST
ALDO2 T15 VCC-PC0
U15 VCC-PC1
C103 0.1u
C100 0.1u
C44 0.1u
GND

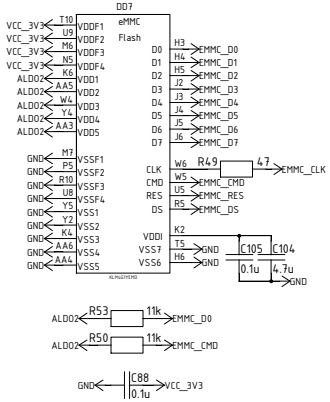
DD7
eMMC
Flash
VCC_3V3 T10 VDDF1
VCC_3V3 U9 VDDF2
VCC_3V3 M6 VDDF3
VCC_3V3 N5 VDDF4
ALDO2 K6 VDD1
ALDO2 AA5 VDD2
ALDO2 W4 VDD3
ALDO2 Y4 VDD4
ALDO2 AA3 VDD5
GND M7 VSSF1
GND P5 VSSF2
GND R10 VSSF3
GND U8 VSSF4
GND Y5 VSS1
GND Y2 VSS2
GND K4 VSS3
GND AA6 VSS4
GND AA4 VSS5
H3 D0 EMMC_D0
H4 D1 EMMC_D1
H5 D2 EMMC_D2
J2 D3 EMMC_D3
J3 D4 EMMC_D4
J4 D5 EMMC_D5
J5 D6 EMMC_D6
J6 D7 EMMC_D7
W6 CLK
R49 47 EMMC_CLK
W5 CMD EMMC_CMD
U5 RES EMMC_RES
R5 DS EMMC_DS
K2 VDDI
T5 VSS7 GND
H6 VSS6 GND
C105 0.1u
C104 4.7u
GND
ALDO2 R53 11k EMMC_D0
ALDO2 R50 11k EMMC_CMD
GND C88 0.1u VCC_3V3

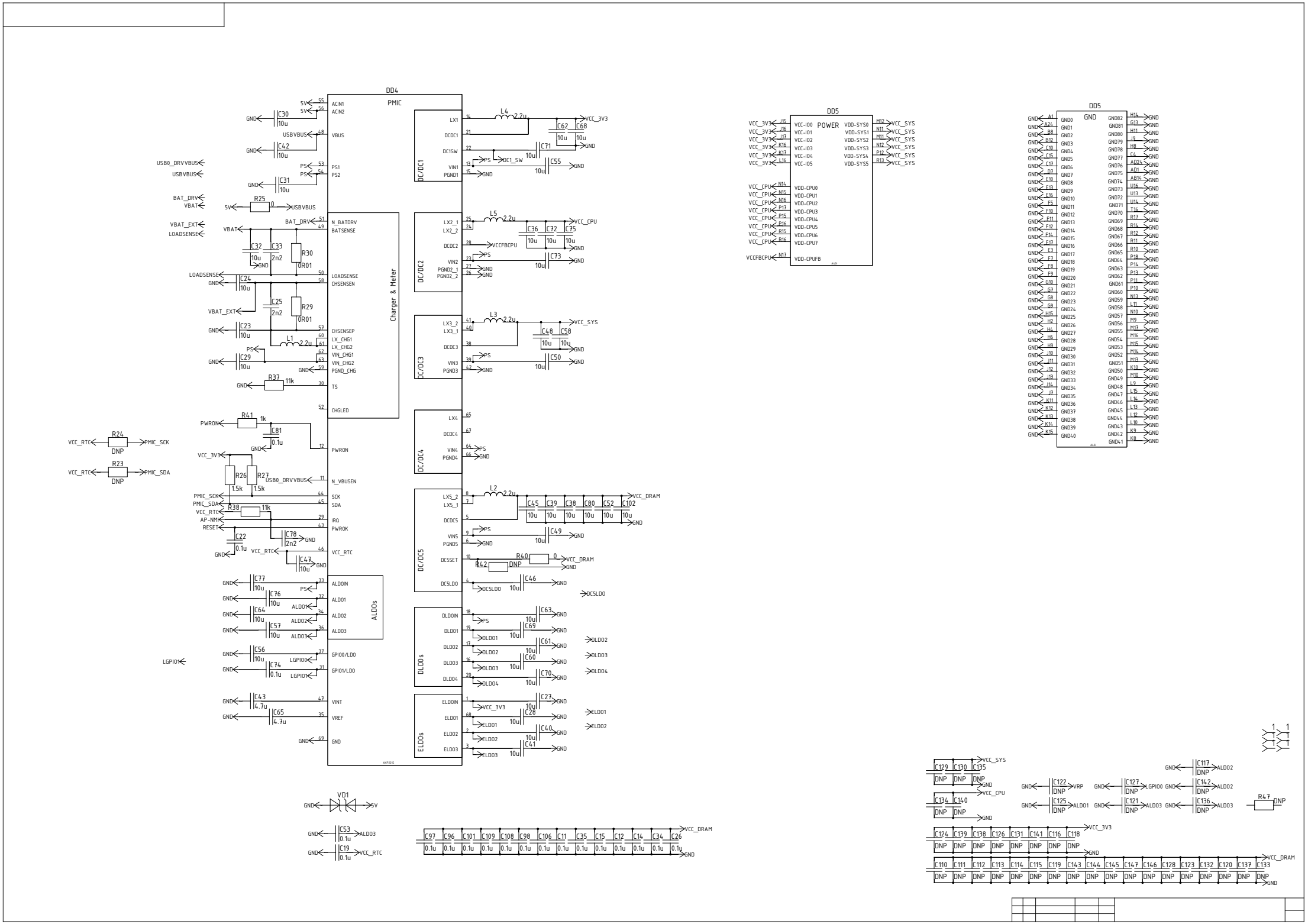
DD4
PMIC
Charger & Meter
ALDOs
DC/DC1
DC/DC2
DC/DC3
DC/DC4
DC/DC5
DLDOs
ELDOs
DD5
POWER
DD5
GND
VD1
R24
DNP
R23
DNP
R47
DNP